CODE	DESCRIPTION	POS.	GR.
281484A84	FRONT PANEL	1	
281639A69	CONDENSE TANK	1	
273098A	ADHESIVE LABEL	2	G0052A
281199B	FLOATING	2	G0001B
281448B72	FLOATING HOLDER	2	G0001B
281485B84	FRONT PANEL	2	G0052A
218974A	EXTERNAL BUOY	3	
242353A54	handle	4	
276571A	82AV-2010-230-31/2 AXIAL FAN	5	
255644C	MAIN CABLE	6	
276147B	GP14PB CUBIGEL COMPRESSOR	7	G0475A
277589A	COMPRESSOR COVER	7	G0475A
276478A	KLIXON GP14 PB	9	G0475A
281344A72	MICROSWITCH HOLDER	10	G0298A
281483A72	micro key	10	G0298A
256489A	CONDENSER COIL	12	
281229C72	vassel	13	
275930A	MICROSWITCH X3C302K2LB	14	
276506A	THERMOSTAT ART.K50-P1118/005	15	
281509A	VIBRATION-DAMPING COMPRESSOR	16	
243962A	VIBRATION-DAMPING SPACER	17	
276145A	EF83161.3 MICROSWITCH	18	G0315A
144700A2	washer nut	19	G0315A
281643A84	CONTROL PANEL	20	
276516A	HUMIDITY SENSOR	21	
276514A	BIPOLAR SWITCH	22	
276550A	ORANGE LED	23	
276551A	GREEN LED	24	
281640A84	SWITCH KEY	25	
281641A84	HUMIDOSTAT HANDLE	26	
276051A	TERMINAL BOX	27	
255607A70	SECCOPROF LABEL	28	
281649A	POLYCARBONATE LABEL	28	
315123A	base	29	
279304A	wheel	31	
271944A	FRONT AIR FILTER	32	
213300A	angle iron	34	
255640C	MAIN BOARD CABLE	36	

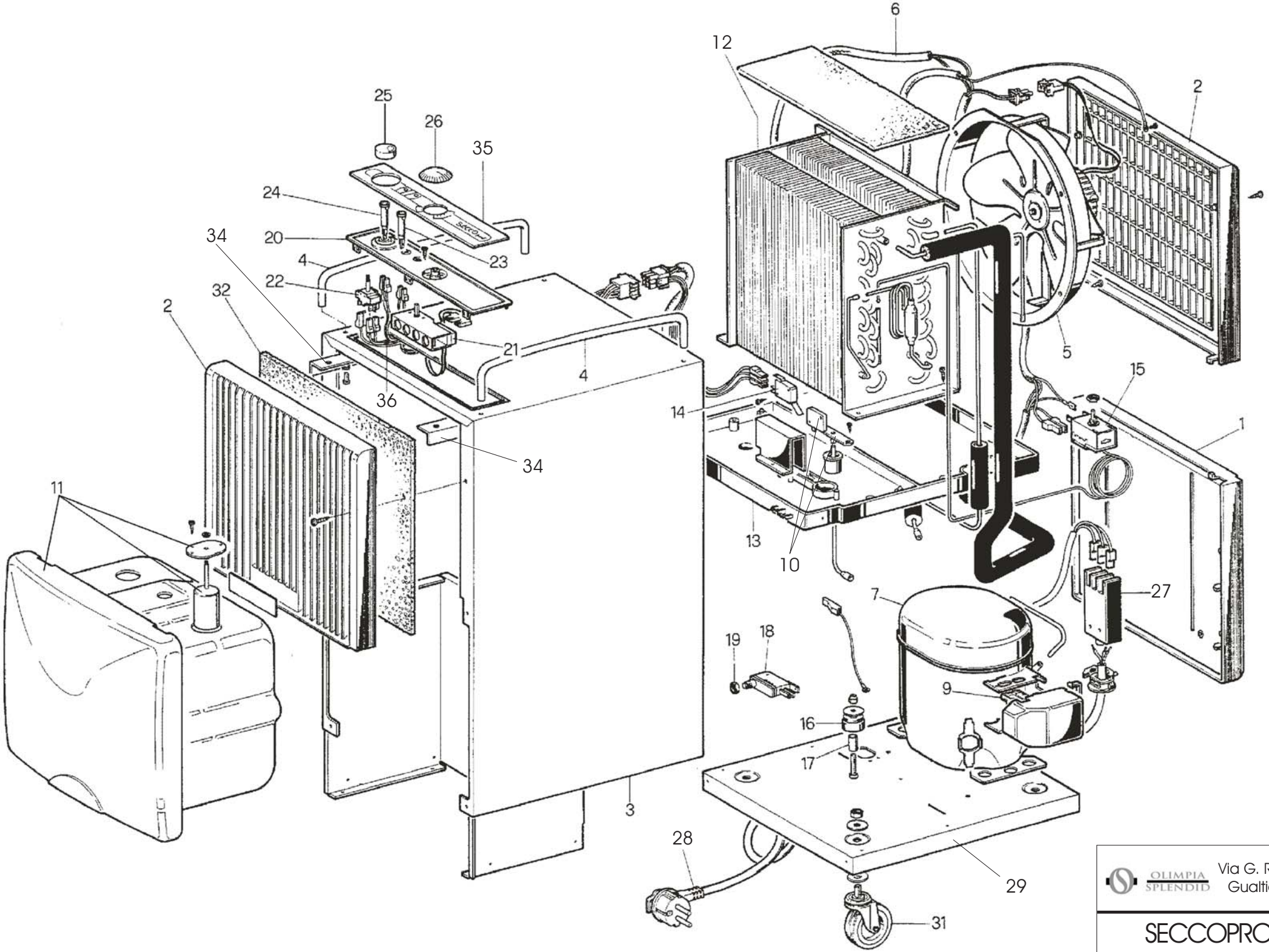

OLIMPIA SPLENDID
Via G. Rossa 1-3
Gualtieri (R.E.)

SECCOPROF

Agg. Settembre 2007 - RIF: 010.02